- Thank you for buying the Underwater Case PT-EP01 (hereinafter Case).
- Please read this instruction manual carefully and use the product safely and correctly. Please keep this instruction manual for reference after reading it.
- Wrong usage may cause damage to the camera inside the Case due to water leakage, and repair may not be possible.
- Before use, perform an advance check as described in this manual.

Introduction

- Unauthorized copying of this manual in part or in full, except for private use, is prohibited. Unauthorized reproduction is strictly prohibited.
- OLYMPUS IMAGING CORP. shall not be responsible in any way for lost profits or any claims by third parties in case of any damage occurring from improper use of this product.

Please read the following items before use

- This Case is a precision device designed for use at a water depth within 40 m. Please handle it with sufficient care.
- Please use the Case correctly after sufficient understanding of the contents of this manual in regard to handling of the Case, checks before use, maintenance, and storage after use.
- OLYMPUS IMAGING CORP. shall in no way be responsible for accidents involving immersion of a digital camera in water. In addition, expenses incurred for damage of internal materials or loss of recorded contents due to water entering the camera will not be compensated.
- OLYMPUS IMAGING CORP. shall not pay any compensation for accidents (injuries or material damage) at the time of use.

For safe use

En

This instruction manual uses various pictographs for correct use of the product and to prevent danger to the user and other person, as well as property damage. These pictographs and their meanings are shown below.

⚠ **WARNING**	This shows the content regarding assumption of possibility of human death or severe injury in case of handling with disregard of this indication.
⚠ **CAUTION**	This shows the contents regarding assumption of possibility of injury or damage to property in case of handling with disregard of this indication.

⚠ WARNING

① Keep this product out of the reach of babies, infants, and children. There is the possibility of occurrence of the following types of accidents.
- Injury by dropping onto the body from heights.
- Injury from parts of the body getting caught in parts which open and close.
- Swallowing of small parts, O-ring, silicone grease and silica gel. Please consult a physician immediately if any parts have been swallowed.

② Do not store digital camera with batteries inserted in this product.
Storage with a battery inserted may lead to leakage of the battery liquid and fire hazard.

③ If leakage of water should occur with a camera installed in this product, quickly remove the battery from the camera. There is the possibility of ignition and explosion from generation of hydrogen gas.

④ This product is made of resin. There is the possibility that injuries may be caused when it becomes broken due to strong impact with a rock or other hard objects. Please handle it with sufficient care.

⚠ CAUTION

① Do not disassemble or modify this product. This may cause water leakage or defect. In case of the loss of image data caused by disassembly, repair or modification etc. by any party other than those appointed by OLYMPUS IMAGING CORP., we shall bear no responsibility for damage.

② Use or storage of the product at the following locations may cause defective operation, defects, damage, fire, internal fogging, or water leakage. This should be avoided.
- Locations reaching high temperatures such as those under direct sunlight, in an automobile, etc.
- Locations close to fire
- A water depth in excess of 40 m
- Locations subject to vibrations
- Locations with high temperature and humidity or with extreme temperature changes
- Locations with volatile substances

③ Opening and closing at locations with much sand, dust, or dirt may impair the waterproof characteristic and cause water leakage. This should be avoided.

④ This product is not a case to soften impacts to the camera inside the product. When this product with a digital camera inside is subjected to impacts or heavy objects are placed onto it, the digital camera may be damaged. Please handle it with sufficient care.

⑤ Do not use the following chemicals for cleaning, corrosion prevention, prevention of fogging, repair or other purposes. When these are used for the Case directly or indirectly (with the chemicals in vaporized state), they may cause cracking under high pressure or other problems.

Chemicals which cannot be used	Explanation
Volatile organic solvents, chemical detergents	Do not clean the Case with alcohol, gasoline, thinner or other volatile organic solvents or with chemical detergents etc. Pure water or lukewarm water is sufficient for cleaning.
Anticorrosion agent	Do not use anticorrosion agents. Pure water is sufficient when washing the metal parts as stainless steel and brass are used.
Commercial defogging agents	Do not use commercial defogging agents. Always use the specified desiccant silica gel.
Grease other than specified silicone grease	Use only the specified silicone grease for the O-ring, as otherwise the O-ring surface may deteriorate and water leakage may occur.
Adhesive	Do not use adhesive for repairs or other purposes. When repair is required, please contact a dealer or a service station of OLYMPUS IMAGING CORP.

⑥ Jumping into the water with the Case in your hand, throwing the Case from a boat or ship into the water, and other rough handling may cause water leakage. Please handle with sufficient care, when handing it over from hand to hand etc.
⑦ If the camera on the inside should become wet because of water leakage etc., immediately wipe off all moisture and confirm the operation.
⑧ Be careful not to apply excessive force to the zoom dial or tripod seat.
⑨ Please remove the O-ring when traveling by air. Otherwise air pressure may make it impossible to open the Case.
⑩ For safe use of the digital camera in this product, please read the “Instruction Manual” for the digital camera carefully.
⑪ When sealing this product, take sufficient care that no foreign matter gets caught at the O-ring and the contact surface. It is caused for water leakage.
⑫ You cannot take pictures by using only the camera’s built-in flash when the digital camera is in the Case.
⑬ The lens port cannot be removed.

Contents

Introduction 1
Please read the following items before use 1
For safe use 1

1.Preparations 6
Check the contents of the package 6
Names of the parts 7
Using the accesories 8
Installation and removal of the LCD hood 8
Mounting and removing the lens cap 8

2.Advance check of the Case 9
Advance check before use 9

3.Installing the digital camera 10
Check the digital camera 10
Open the Case 11
Pop up the flash 11
Load the digital camera 12
Make sure the camera is loaded properly 12
Seal the Case 13
Check the operation of the loaded camera 13
Water Leakage Test 14

4.How to connect the electronic flash 15
Connecting the underwater optical fiber cable 15

5.Taking Pictures Under Water 16
How to select the shooting modes 16
Underwater shooting modes 16

6.Handling After Shooting 17
Wipe off any waterdrop 17
Unload the digital camera 17
Wash the Case with pure water 17
Dry the Case 18

7.Maintaining the Waterproof Function 19
Remove the O-ring 19
Remove any sand, dirt, etc. 19
Install the O-ring 19
How to Apply Grease to the O-ring 20
Replace consumable products 21

8.Appendix 22
Specifications 22

En

Supplied accessories for PT-EP01 22
Optional accessories..... 22

En

1. Preparations

Check the contents of the package

Check that all accessories are in the box.
Contact your dealer if accessories are missing or damaged.

• Case body
(Check that the O-ring is installed.)

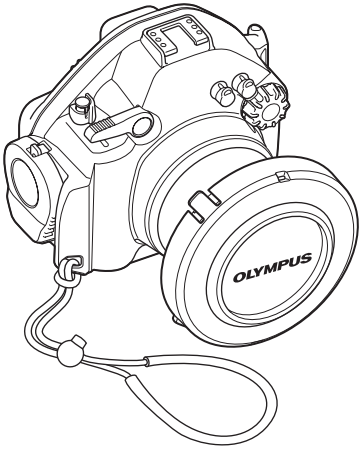

• Hand strap

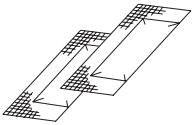

• Silica gel (1g)

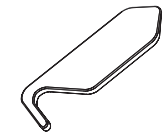

• O-ring remover

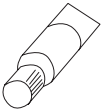

• Silicone grease

• Authorized distributors list/Authorized service centres list
• Instruction manual (this manual)

⚠ CAUTION:
After purchase, be sure to do maintenance even in brand-new condition. Neglecting the maintenance may become the cause of water leakage.
For how to maintenance the case, refer to P.19.

En

Names of the parts

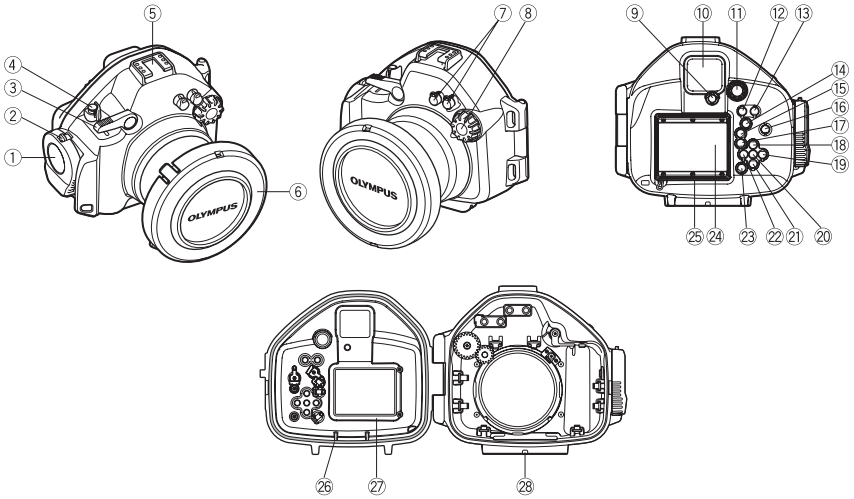

① Open/close dial
② Slide lock
*③ Shutter lever
*④ ON/OFF button
⑤ Accessory mount
⑥ Body cap
⑦ Optical fiber cable insertion slot, cap
⑧ Zoom dial
⑨ |▢| button
⑩ Finder window
*⑪ Control dial knob
*⑫ ▩/Fn button
*⑬ 🔍 button
*⑭ ▶ (Play) button
*⑮ **MENU** button
*⑯ ● (REC) button
*⑰ **INFO** (Info display) button
*⑱ ▩ (Exposure correction) button/Cross-cursor button ▲
*⑲ ⚡ button/Cross-cursor button ▶
*⑳ **START/OK** button
*㉑ ▭ button/Cross-cursor button ▼
㉒ [▪▪▪] button/Cross-cursor button ◀
*㉓ 🗑 (Erase) button
㉔ LCD monitor window
㉕ LCD hood
㉖ O-ring (POL-EP01)
㉗ LCD inner hood
㉘ Tripod seat

En

Note:
Case operation parts marked by * corresponds to the operation parts of the digital camera. When the operation parts of the Case are operated, the corresponding functions of the digital camera will operate. For details of the functions, refer to the instruction manual for the digital camera.

Using the accesories

Installation and removal of the LCD hood

Installation
Strongly push the LCD hood as shown in the figure into the rails above and below the LCD monitor window.

Removal
Remove the LCD hood from the rails above and below the LCD monitor window by widening the LCD hood.

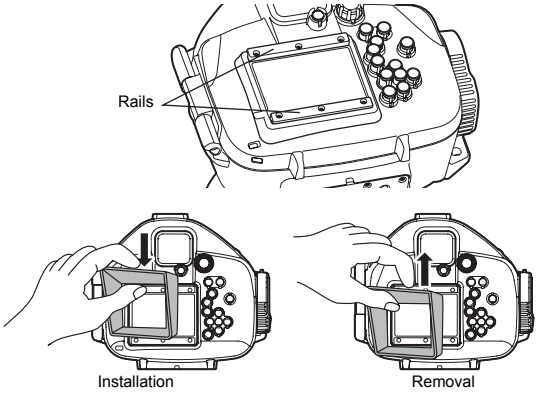

Mounting and removing the lens cap

Fit the lens cap onto the lens ring as shown in the figure. Be sure to remove the lens cap before shooting.

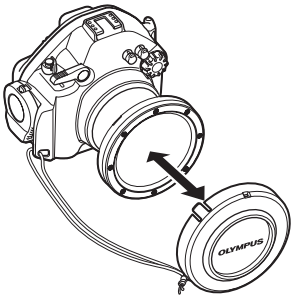

En

2. Advance check of the Case

Advance check before use

This Case has been the subject of thorough quality control for the parts during the manufacturing process and thorough function inspections during the assembly. In addition, a water pressure test is performed with a water pressure tester for all products to confirm that the performance conforms to the specifications.
However, depending on the carrying and storage conditions, the maintenance status, etc., the waterproof function may be damaged.
Before using, always perform the following advance checks.

Advance check

① Before loading the digital camera in the Case, immerse the empty Case to confirm that there is no water leakage. When it is difficult, water leakage can be checked by referring “Water Leakage Test” (P.14).

② Main causes of water leakage are as follows.
- Forgetting to install the O-ring
- Part of an O-ring or an entire O-ring is outside the specified groove.
- O-ring damage, cracks, deterioration or deformation
- Sand, fibers, hair or other foreign matter sticking to the O-ring, the O-ring groove or the O-ring contact surface.
- Damage to an O-ring groove or O-ring contact surface.
- Attached strap or silica gel getting caught when closing the Case.

Perform the test after the above causes have been eliminated.

⚠ CAUTION:
If the advance test should show water leakage with normal handling, stop using the Case and contact your dealer or an Olympus service station.

3. Installing the digital camera

Check the digital camera

Check the digital camera before loading it in the Case.

1. Battery Confirmation

It is difficult to change the batteries when using the Case. Make sure that you have sufficient remaining battery capacity before use.

2. Check the remaining number of pictures

Check that the image storage medium has enough room for the number of pictures you want to take.

3. Remove the strap and lens cap from the camera.

If the digital camera is loaded without removing the strap and lens cap, the Case cannot be sealed properly and may leak.

4. Attach the zoom gear (optional) and the antireflective ring (optional).

Example of 14-42mm lens

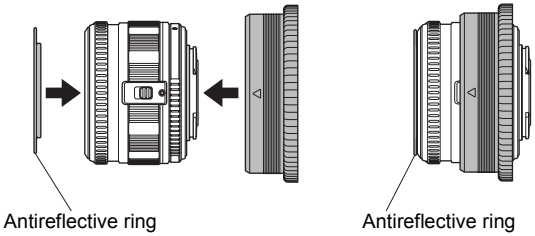

For details, refer to the instruction manual of the zoom gear and the antireflective ring.

5. Attach the electric view finder (EVF) to the digital camera.

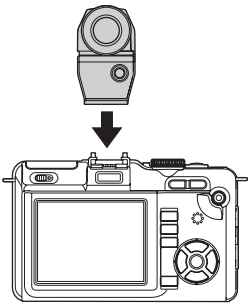

⚠ CAUTION:

- It is possible to shoot pictures without EVF.
- You cannot use the optical view finder (OVF).
- Use EVF without acquiring angle. It may be broken.

En

Open the Case

① Slide and hold the slide lock towards the arrow direction (①) and turn the open/close dial clockwise (②).
② Open the rear lid of the Case gently.

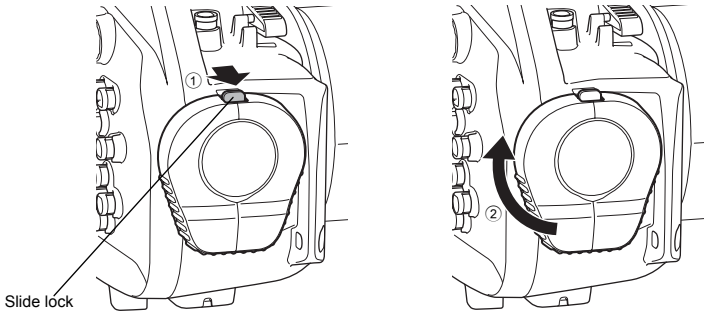

⚠ CAUTION:
Do not exert too much force while turning the open/close dial. Doing so may damage the dial.

Pop up the flash

The camera's built-in flash cannot be used when the camera is in the Case.
Be sure to pop up the flash to make the outside flash synchronous.

En

Load the digital camera

① Confirm that the digital camera is OFF.
② Gently insert the digital camera into the Case.
③ Insert a silica gel bag (1g) between the bottom of the digital camera and the Case.
The silica gel bag provided for prevention of fogging.

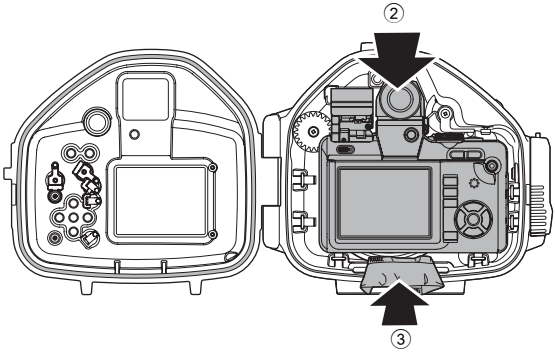

⚠ CAUTION:
- The silica gel bag will be caught when the Case is sealed and water leakage will occur.
- Once silica gel has been used, the moisture absorption performance will be impaired. Always replace the silica gel when the Case is opened and closed.

Make sure the camera is loaded properly

Check the following points before sealing the Case.
- Is the digital camera loaded properly?
- Is silica gel inserted all the way at the specified location?
- Is the O-ring attached properly to the opening on the Case?
- Is there any dirt or foreign matter on the O-ring or the O-ring contact surface on the front lid?
- Is the waterproof function maintenance performed? (For details of the maintenance, see “Maintaining the Waterproof Function” (P. 19) of this manual.)

En

Seal the Case

① Close the Case gently while aligning the mounting projection of the rear lid and groove.
② Turn the open/close dial counter clockwise.
• The Case is sealed.

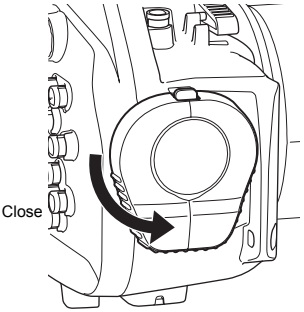

⚠ CAUTION:
• If the open/close dial is not fully turned, the Case will not be sealed. This will cause water leakage.
• Close the rear lid of the Case so that the lens cap or LCD hood strap doesn't catch. If it catches, water leaks may result.

Check the operation of the loaded camera

After sealing the Case, check that the camera operations normally.
• Push the ON/OFF button on the Case and confirm that the camera turns ON/OFF.
• Turn the mode dial on the Case and confirm that the camera mode switches properly.
• Press the shutter lever on the Case and confirm that the camera shutter releases.
• Operate the zoom dial on the Case and confirm that the camera's lens is controlled.
• Operate other control button on the Case and confirm that the camera functions properly as intended.

En

Water Leakage Test

The final test after loading the camera is explained below. Always perform this test. It can be performed easily in a water tank or a bathtub. The required time is about five minutes.

- At first, immerse the Case for only three seconds and check that no water drop etc. to the Case.
- Next, immerse the Case for 30 seconds and check that no water drop etc. to the Case.
- Furthermore, immerse the Case for three minutes.
- Check followings:
  - check that no water has accumulated the Case.
  - check that the Case is not clouded.
  - check that no water has entered the Case.
- If inside of the Case becomes cloudy or there is a water drop, do the maintenance of the O-ring and perform the water leakage test again.

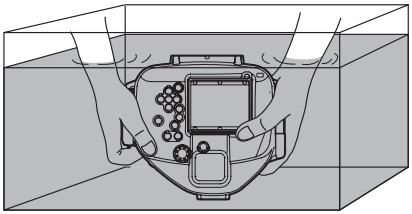

En

4. How to connect the electronic flash

Connecting the underwater optical fiber cable

To connect the UFL-2 underwater flash (optional) to the Case using an underwater optical fiber cable (optional: PTCB-E02), follow the procedures below.

How to connect the underwater optical fiber cable

① Remove the cap of the optical fiber cable insertion slot.

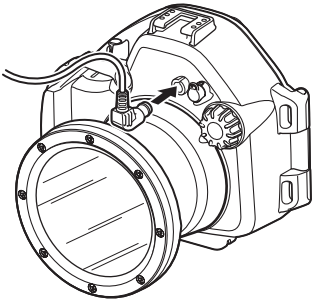

② Put the underwater optical fiber cable plug all the way into the optical fiber cable insertion slot.

Setting of the digital camera

① Set the RC mode of the camera to ON so that the camera's built-in flash is activated.
② Load the camera in the Case with the camera's built-in flash popped up.

In case of UFL-2, turn the RC mode to OFF.
For deitals, refer to the instruction manual of UFL-2.

In case of UFL-1, turn the RC mode to OFF.

En

5. Taking Pictures Under Water

How to select the shooting modes

You can easily set the underwater mode to assign to an Fn button of the digital camera.
For details, see the button setting on the instruction manual of the digital camera (P.80).

Underwater shooting modes

■ Underwater Wide-Angle

Suitable for shooting a scene that extends across a wide range such as a school of fish swimming through the water. Background blues are vividly reproduced.



■ Underwater Macro

Suitable for close-up shooting of small fish and other underwater creatures. Natural colors of the underwater are accurately reproduced.

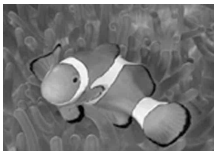

En

6. Handling After Shooting

Wipe off any waterdrop

After underwater shooting, remove any drops of water from the case. Use pressurized air or a soft, lint-free cloth to carefully wipe away any moisture from the hinge between the front and rear lids, the shutter release lever and the open/close dial.

⚠ CAUTION:
Water left between the front and rear lids can get inside the case once it is opened. Please dry these areas carefully.

Unload the digital camera

Open the Case carefully and take the digital camera out.

⚠ CAUTION:
- When opening the case, make sure no water from outside (e.g. drops from your hair or the diving suit) gets inside the case and/or on the camera!
- Before opening the case, ensure that your hands or gloves are completely clean (free of sand, loose fibers, etc.).
- Never open the case in areas where water could splash or spray or where sand or dust could be blown in the air. When this cannot be avoided, for example if the battery or memory card needs to be changed, the case and camera should be protected from the wind or spray with a plastic sheet or similar object.
- Never touch the digital camera and/or battery when your hands are wet with sea water.

Wash the Case with pure water

After use, seal the Case again after taking out the camera and wash it sufficiently in pure water as soon as possible.
After use in sea water, it is effective to immerse it for a fixed time (30 minutes to 1 hour) in pure water to remove any salt.

⚠ CAUTION:
- Water leakage may be caused when a high water pressure is applied locally. Before washing the Case with water, remove the digital camera from it.
- Operate the shutter lever and various buttons of this product in pure water to remove salt adhering to the shaft. Do not disassemble for cleaning.
- Letting salt dry on the case may impair the function. Always wash off any salt after use.

Dry the Case

After washing with pure water, use a lint-free soft cloth without any salt on it to wipe off any waterdrop and dry the Case completely at a well ventilated location in the shade.

⚠ CAUTION:
Do not use hot air from a hair drier or the like for drying and do not expose the Case to direct sunlight, as this may accelerate deterioration and deformation of the Case and deterioration of the O-ring, leading to leakage of water.
When wiping the Case, take care not to cause scratches.

7. Maintaining the Waterproof Function

The O-ring is a consumable product. Before each use, perform proper maintenance. Always be sure to perform the O-ring maintenance operation as described below. Neglecting this maintenance may become the cause of water leakage.
Perform at the location without sand or dust, after washing and drying your hands.

Remove the O-ring

Open the Case and remove the O-ring.

Procedure

① Insert the O-ring remover into the gap between the O-ring and O-ring groove wall.
② Bring the tip of the inserted O-ring remover below the O-ring. (Be careful not to damage the groove with the tip of the O-ring remover.)
③ Lift the O-ring, pinch it with your fingertips and pull it out of the Case.

Remove any sand, dirt, etc.

After visually checking that dirt has been removed from the O-ring, check for attached sand and other foreign matter, as well as for damage and cracks by squeezing the entire circumference of the O-ring lightly with your fingertips.
Remove attached foreign matter from the O-ring groove with a clean cloth or a cotton swab. Also remove any sand or dirt attached to any part of the Case that comes into contact with the O-ring.

⚠ CAUTION:
- When a sharp object is used to remove the O-ring or to clean the inside of the O-ring groove, the Case and the O-ring may be damaged and water leakage may be caused.
- When the O-ring is checked with the fingertips, take care not to stretch the O-ring.
- Never use alcohol, thinner, benzene or similar solvents or chemicals detergents to clean the O-ring. When such chemicals are used, it is likely that the O-ring will be damaged or that its deterioration will be accelerated.

En

Install the O-ring

Confirm that no foreign matter is attached, apply a thin coat of the accessory grease to the O-ring, and fit the O-ring into the groove. At this time, confirm that the O-ring does not stick out from the groove.
When sealing this product, make sure that no hairs, fibers, sand particles or other foreign matter stick not only to the O-ring, but also to the contact surface (front cover). Even a single hair or a single grain of sand may cause water leakage. Please check with special care.

How to Apply Grease to the O-ring

① Apply only Olympus exclusive lubricant to each O-ring.		Make sure that your fingers and the O-ring are free of dirt, and squeeze about 5 mm of lubricant onto a finger. (5 mm is the most appropriate amount.)
② Spread the lubricant onto the entire circumference of the O-ring.		Spread the grease onto the entire circumference of the O-ring using 3 fingers. Be careful not to use excessive force as this may stretch the O-ring.
③ Check that the O-ring is free of scratches or unevenness.		After spreading the lubricant, check visually and by touch that the O-ring is not scratched and that its surface is flat. If it is damaged in any way, replace it with a brand-new O-ring.

⚠ CAUTION:

- Always perform maintenance of the waterproof function even when the Case has been opened every shooting. Neglecting this maintenance may become the cause of water leakage.
- When the Case is not to be used for a long time, remove the O-ring from the groove to prevent deformation of the O-ring, apply a thin coat of silicone grease, and store it in a clean plastic bag or the like.

Examples of foreign matter sticking to the O-ring

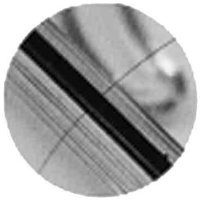

Hair



Fibers

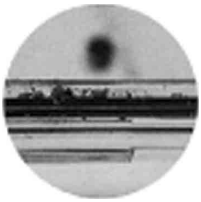

Grains of sand

En

Replace consumable products

- The O-ring is a consumable product. Independent of the number of times the Case is used, it is recommended that the O-ring should be replaced by a new piece at least once a year.
- Deterioration of the O-ring is accelerated by the usage conditions and the storage conditions. Replace the O-ring even before a year has passed if it shows signs of damage, cracking or loss of elasticity.

⚠ CAUTION:

- Please use genuine Olympus silicone grease, silica gel and O-ring.
- Do not try to replace the O-ring by yourself.
- We recommend to perform the check periodically.

8. Appendix

Specifications

Available models	Olympus Digital Camera E-PL1
Pressure resistance	Depth of down to 40 m (130 feet)
Main materials	Main body: Polycarbonate resin. Tripod seat: Brass. Axis of operation buttons: Stainless steel. Body cap: ABS resin. O-rings: Silicone rubber. LCD inner hood: EPDM rubber. LCD hood: NBR rubber.
Dimensions	Width 179.0 mm x height 156.0 mm x depth 166.0 mm
Weight	1,100 g (camera and accessories not included)
Weight under water	–198 g (including camera, EVF, lens (14-42mm), zoom gear, antireflective ring, battery and media card) (in the freshwater)

* We reserve the right to change the external appearance and the specifications without notice.

Supplied accessories for PT-EP01

O-ring: POL-EP01
Silicone grease: PSOLG-2
Silica gel: SILCA-5S
LCD hood: PFUD-EP01
Body cap: PBC-EP01

Optional accessories

Silicone grease: PSOLG-3
Underwater optical fiber cable: PTCB-E02
Bracket: PTBK-E01, PTBK-E02
Short arm: PTSA-03
Underwater flash: UFL-2, UFL-1
Macro lens adapter: PMLA-EP01
Macro lens: PTMC-01
Zoom gear for 14-42mm: PPZR-EP01
Antireflective ring for 14-42mm: POSR-EP01

* When use combining PTBK-E01 and the Case, the dedicated washers are necessary in the screw part. If you have PTBK-E01 to which dedicated washers are not bundled, please contact to customer support center.

Accessories can be purchased. Products of other model types than those describing above cannot be used.
The Case does not correspond to any lens.
For details of the target lens, refer to Olympus website or catalogue.

OLYMPUS®

http://www.olympus.com/

OLYMPUS IMAGING CORP.

Shinjuku Monolith, 3-1 Nishi-Shinjuku 2-chome, Shinjuku-ku, Tokyo, Japan

OLYMPUS IMAGING AMERICA INC.

3500 Corporate Parkway, P.O. Box 610, Center Valley, PA 18034-0610, U.S.A. Tel. 484-896-5000

Technical Support (USA)
24/7 online automated help: http://www.olympusamerica.com/support
Phone customer support: Tel. 1-888-553-4448 (Toll-free)

Our phone customer support is available from 8 am to 10 pm
(Monday to Friday) ET
E-Mail: distec@olympus.com
Olympus software updates can be obtained at: http://www.olympusamerica.com/digital

OLYMPUS IMAGING EUROPA GMBH

Premises: Wendenstrasse 14-18, 20097 Hamburg, Germany
Tel: +49 40-23 77 3-0 / Fax: +49 40-23 07 61
Goods delivery: Bredowstrasse 20, 22113 Hamburg, Germany
Letters: Postfach 10 49 08, 20034 Hamburg, Germany

European Technical Customer Support:
Please visit our homepage **http://www.olympus-europa.com**
or call our TOLL FREE NUMBER* : **00800 - 67 10 83 00**
for Austria, Belgium, Denmark, Finland, France, Germany, Italy, Luxemburg, Netherlands, Norway, Portugal, Spain, Sweden, Switzerland, United Kingdom
* Please note some (mobile) phone services providers do not permit access or request an additional prefix to +800 numbers.

For all European Countries not listed and in case that you can't get connected
to the above mentioned number, please make use of the following
CHARGED NUMBERS: **+49 180 5 - 67 10 83** or **+49 40 - 237 73 4899**
Our Technical Customer Support is available from 9 am to 6 pm MET (Monday to Friday)